Structural Design and Experiments of an 8 DOF Robot

Libo Zhang, Xingang Miao and Su Wang

Abstract Eight DOF robot studied in this paper is the PRRPR-S robot as a camera robot, which is an important tool of reproducing camera movement for multilayer composite film effects and realizing complex camera motion path. In this paper, the main research is to focus on structural design and experiments. The physical prototype is designed based on SolidWorks, and the rationality of mechanism design is analyzed through simulation experiment with genetic algorithm by taking two axes of movement structure as redundancy. Finally, the upper monitor command enables the camera robot to move to the target position. End-effector position of actual measurement is consistent with theoretical calculation, and the result is achieved in terms of the physical prototype. If end-effector of robot is replaced by welding equipment, the 8 DOF robot also is as a visual tracking robot for welding. The research significance of the robot is that it can simplify the operation difficulty and shorten the operation time. In addition, the robot can get the position and attitude of the end-effector exactly in practice.

Keywords Camera robot · Structural design · Physical prototype
Genetic algorithm

1 Introduction

As a camera robot, the 8 DOF robot controls the motion of camera, and its trajectory is accurately recorded and stored in the computer. In addition, trajectory data can be edited and modified. The biggest technical characteristics of robot is

L. Zhang · S. Wang
School of Mechanical Engineering and Automation, Beihang University,
Beijing 100191, China

X. Miao (✉) · S. Wang
Beijing Key Laboratory of Robot Bionics and Function Research, Beijing University of Civil Engineering and Architecture, Beijing 100044, China
e-mail: miaoxingang@bucea.edu.cn

S. Chen et al. (eds.), *Transactions on Intelligent Welding Manufacturing*,
Transactions on Intelligent Welding Manufacturing,
https://doi.org/10.1007/978-981-10-8740-0_11

trajectory, which hardly is achieved manually. In consideration of shooting space and load bearing, the special multi-axis camera robot is more applicable [1]. Camera robot has been developed for many years, and its physical prototype has been used in film and television production. An 8 DOF serial camera robot is designed in this paper, which boasts flexible movement and accurate positioning ability. In this research work, the design of the structure and especially the design of relevant components are independent innovation design. This camera robot arm is longer, and the working space is bigger [2]. At the same time, the structure is optimized to ensure that the system is rigid, and the light weight is maintained.

2 Integral Structure Design

In this paper, the camera robot is an 8 DOF robot. With mechanism geometric flexibility, the robot intelligent control system serves to complete a variety of complex operational tasks [3]. Compared with the traditional industrial robot, upper arms can be extended, and the robot body can be moved in a linear orbit. The three-dimensional model based on SolidWorks is shown in Fig. 1.

There are 8 movement axes. As shown above, the displacement of bottom linear motion, the rotation angle of bottom annular rotator, the rotation angle of top pitch rotator, the displacement of top linear motion, the rotation angle of top distal pitch rotator, and 3 rotation angles of end-effector posture rotator. The bottom linear axis and the top linear are chosen as linear motion, there will be a big workspace for end-effector of robot. Except the two axes, the rest of the structure is an industrial 6 DOF robot which has mature algorithm of inverse kinematic solution.

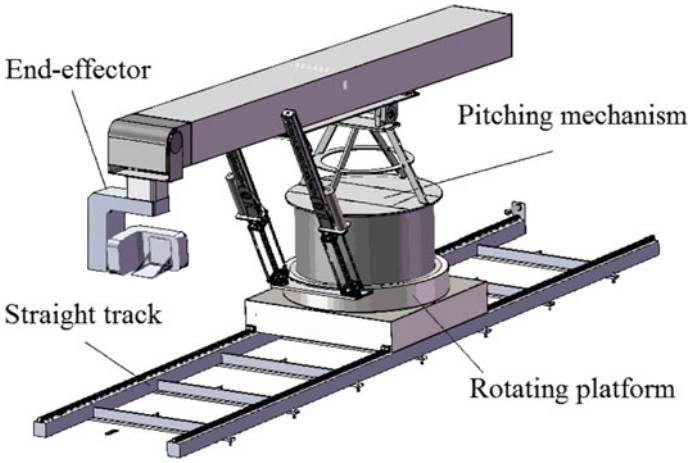

Fig. 1 Integral structure design model

Moreover, the major structural innovative design of camera robot is the straight track, the rotating platform and the pitching mechanism.

3 Main Mechanism Design

3.1 Straight Track

The mobile platform is installed on 2 linear guide rails with 4 sliders, as shown in Fig. 2. The linear guide rail is too long, and difficult to achieve fully parallel equidistant, so the mobile platform and sliders will be jammed in movement process.

Therefore, the longitudinal movement of mobile platform is decoupled completely, through small fitting clearance between shaft and bearing on one linear guide rail, and which ensures the reliability of the operation. The base of robot body is installed on the sliding guide rail, and the rotary motion of motor is converted to linear motion by gear rack.

3.2 Rotating Platform

Rotating platform is an adaptive structure, consisted of upper platform, supporting structure and bottom platform, as shown in Fig. 3.

The structure is also decoupled completely through small fitting clearance, which achieves adaptive adjustment of upper platform motion. An annular rack is arranged on the upper platform, and the motor drives the rotating platform through cooperation of gear and annular rack.

3.3 Pitching Mechanism

Pitching mechanism is essentially double push rods landing gear, consisted of supporting frame, supporting joint and push rod mechanism, as shown in Fig. 4.

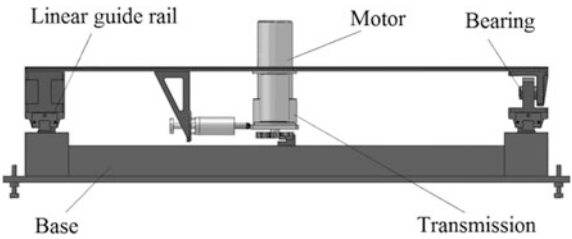

Fig. 2 Straight track model

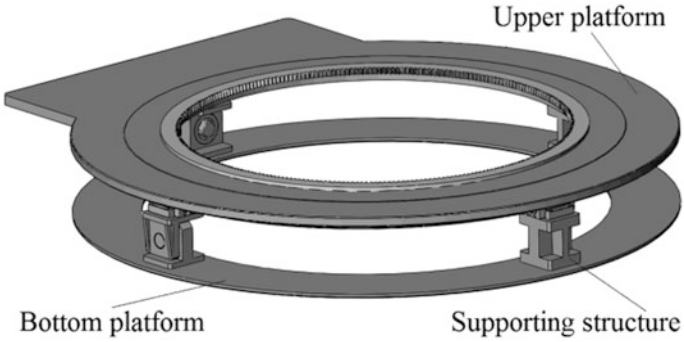

Fig. 3 Rotating platform model

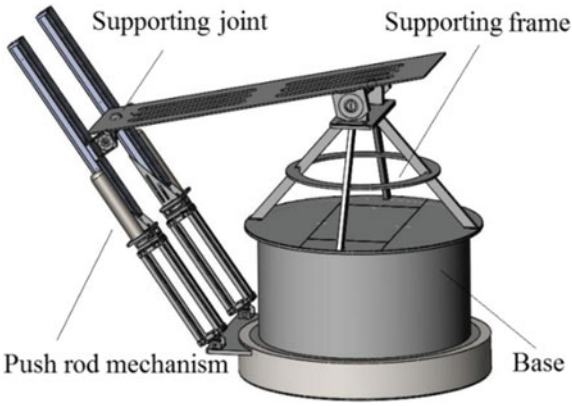

Fig. 4 Pitching mechanism model

The pitching motion of the camera on top supporting plate is realized by two groups of push rod mechanisms. The supporting joint is a rotating shaft which is designed to a module, two top end bearing seats are respectively arranged on the linear sliding block of two groups of push rod mechanisms. Push rod mechanism is composed of ball screw. The lifting mechanism with decoupling function has the adaptability of geometric constraint, and does not need to adjust the work.

4 Physical Prototype

Physical prototype of camera robot is completed based on SolidWorks, as shown in Fig. 5.

The robot kinematic model is established based on the assumption that robot is a rigid body, the DH model is adopted for the first 7 joints of camera robot [4, 5], and the last one employs the 6-parameter model. The position target is transformed into

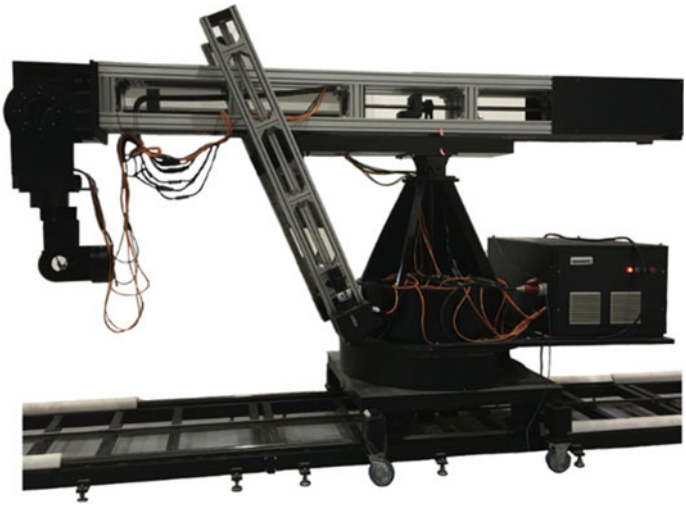

Fig. 5 Physical prototype of camera robot

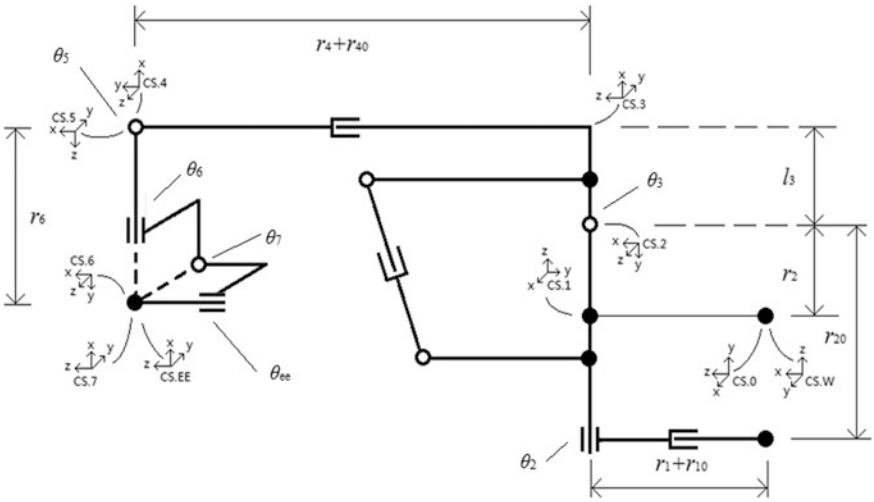

Fig. 6 Connecting rod coordinate system

the trajectory planning of joint space in position, which can avoid singularity problem. Finally, connecting rod coordinate system is created, the robot "Initial standard zero state" and coordinate system on the link are shown in Fig. 6.

There are 8 movement axes. As shown above, r_1 is bottom displacement, θ_2 is bottom annular rotator angle, θ_3 is top pitch rotator angle, r_4 is top displacement,

θ_5 is top distal pitch rotator angle, θ_6 is end-effector posture rotator angle, θ_7 is end-effector pitch rotator angle, θ_{ee} is end-effector roll rotator angle.

5 System Control Strategy

A robot intelligent control system serves to complete a variety of complex operational tasks. In this paper, genetic algorithm is used as the control algorithm of inverse kinematics. Inverse kinematic solutions for the robot in position are examined in order to alleviate operation difficulty and reduce time. Genetic algorithm is employed to optimize inverse kinematic solutions of the robot in the joint space. Optimization objective function consists of the minimum position error and rotation angle of each joint.

The existence probability of the effective individuals is very low because of randomness of the initial population,and the algorithm convergence effect is poor. GA based on redundant DOF and pattern search is related to motion characteristics by taking the axes of r_1 and r_4 as redundancy. By presetting the initial population, GM overcomes the defects of randomness and sequence in GA and converges to the global optimal solution stably on position-level. Therefore, genetic algorithm obtains inverse solutions by taking an arbitrary set of 2-dimensional vector of 2 redundant DOF as an individual in physical constraint.

Fitness function to be optimized is called objective function in the classical optimization algorithm. Choose the solution with the value of the optimal function as the optimal solution, which reduces the 8-dimensional solution space to 2-dimensional one. In this paper, the smallest value of objective function is found through using the setting of GA toolbox in MATLAB, and the movement amplitude weighting is taken as optimization objective function, which is included in fitness function *HijGAFcn*, as presented in Fig. 7.

Figure 7 shows that the minimum value of fitness function exists in a space consisting of $r_1 \in [1000, 2000]$ and $r_4 \in [0, 500]$, which is related to the weight setting of optimization objective function.

A set of random $[r_1\ r_4]$ as a 2-dimensional individual is introduced to the genetic algorithm, Individual = FUTS = $[r_1\ r_4]$. The 50 group target value of bottom linear motion axis and top linear motion axis are randomly selected, with 2 genes for each individual. As a result, there are 10 rows and 2 columns in population matrix with identical individuals in the population at the same time.

6 Experiment and Comparison

The experiment is simulated in MATLAB, simulation time is about 203.6 s at one time, and the robot can reach the target position, as presented in Fig. 8.

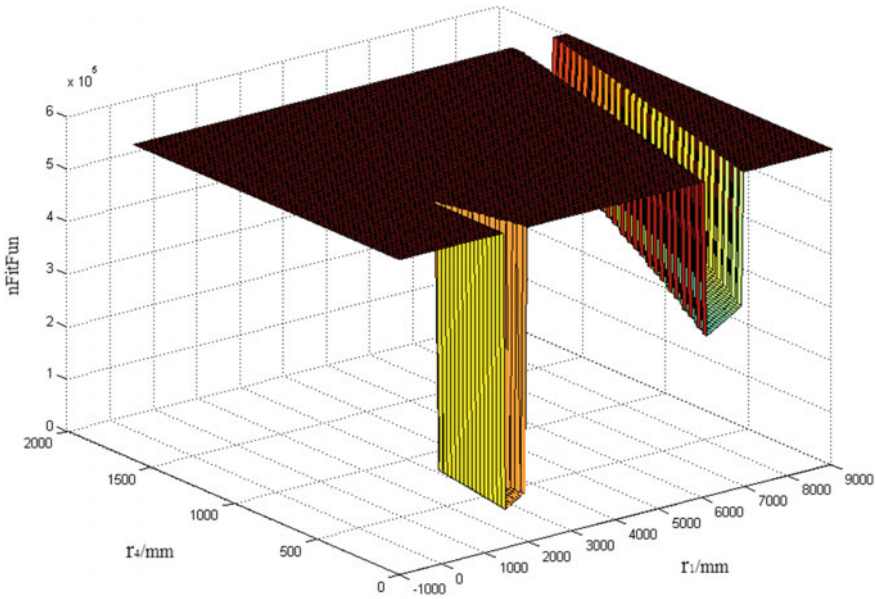

Fig. 7 The graph of fitness function

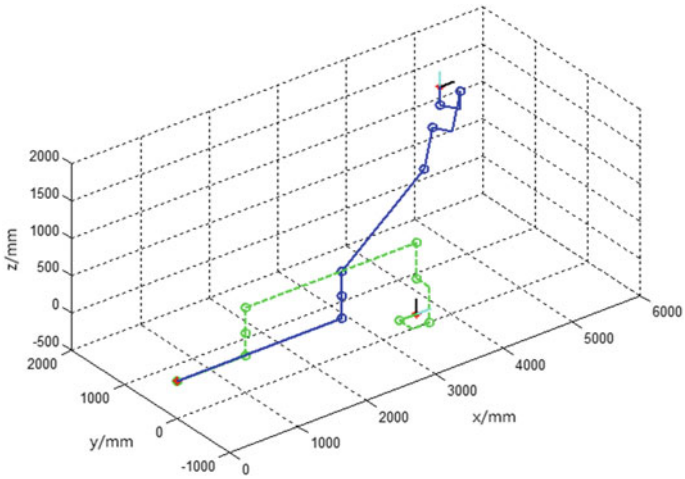

Fig. 8 The target position on genetic algorithm

In order to analyze the experiment, theoretical value is set in advance. Make ***CRCP*** camera robot current position zero-point, ***paT*** is homogeneous matrix of target position.

$$CRCP = [0 \quad 0 \quad 0 \quad 0 \quad 0 \quad 0 \quad 0 \quad 0]^{\mathrm{T}} \tag{1}$$

$$paT = \begin{bmatrix} 1 & 0 & 0 & 5000 \\ 0 & 1 & 0 & 1500 \\ 0 & 0 & 1 & 1500 \\ 0 & 0 & 0 & 1 \end{bmatrix} \tag{2}$$

Pose homogeneous matrix of target point coordinate system based on end-effector coordinate system is

$$\mathbf{paT}^{\mathrm{Z}} = (\mathbf{paZ})^{-1} \cdot \mathbf{paT} = \begin{bmatrix} 0 & 0 & 1 & 1830 \\ 0 & -1 & 0 & -1500 \\ 1 & 0 & 0 & 1500 \\ 0 & 0 & 0 & 1 \end{bmatrix} \tag{3}$$

The upper monitor command based on initial data and control algorithm enables camera robot to move to the target position. Metronor known as Coordinate Measuring Machine, is used to measure space position of the target point for physical prototype. The zero position of the end-effector coordinate system is relative to the world coordinate system of Metronor. Finally, the actual pose homogeneous matrix $\boldsymbol{paT}^{\mathrm{Z0}}$ is deduced based on the measurement data.

$$\boldsymbol{paT}^{\mathrm{Z0}} = \begin{bmatrix} -0.055 & -0.065 & 0.998 & 1856.540 \\ 0.083 & -0.996 & -0.061 & -1426.166 \\ 0.998 & 0.082 & -0.002 & 1516.816 \\ 0 & 0 & 0 & 1 \end{bmatrix} \tag{4}$$

Compared with Eq. (3), it can be seen that, the measurement is almost consistent with theoretical position. The target pose error between actual measurement and theoretical simulation is primarily attributed to the parameter error of robot links and the artificial error of three coordinate measuring system. This also shows that the design of structural is rational, and the solution of genetic algorithm is efficient. This 8 DOF robot can automatically select a best track to perform a task through the genetic algorithm. Meanwhile, total running time of this algorithm is in an allowed time.

7 Conclusion

The geometric structure of 8 DOF robot is highly flexible, and provides valuable sources for both theoretical research and practicability. As a camera robot, present study is aim to reduce the difficulty and time. The directors can directly specify the end-effector position without the aid of professional operators, and automatically

select the best track to audition through algorithm. The robot main structure can also be used for welding, then reachable space is very large, because upper arms can be extended, and the robot body can be moved in a linear orbit. In addition, the actual measurement position of 8 DOF robot is basically in line with the theoretical results, and the aim of simplifying operation difficulty and reducing operation time of robot is consequently achieved.

References

1. He JJ, Wang S (2015) Current situation and analysis of camera robot. Adv Motion Pict Technol 6:45–48
2. Lee C, Ziegler M (1984) Geometric approach in solving inverse kinematic of PUMA robots. IEEE Trans Aerosp Electron Syst 20(6):695–706
3. Asfour T et al (2003) Human-like motion of a humanoid robot arm based on a closed-form solution of the inverse kinematic problem. In: IEEE/RSJ international conference on IROS, vol 2. IEEE, Las Vegas, pp 1407–1412
4. Judd RP, Knasinski AB (2002) A technique to calibrate industrial robots with experimental verification. IEEE Trans Rob Autom 6(1):20–30
5. Stone HW et al (1988) Statistical performance evaluation of the S-model arm signature identification technique. In: IEEE ICRA. IEEE, Philadelphia, pp 939–946